SOLUTIONS PAPER

OCAP™ (tru2way™)

Enables Next-Generation Interactive Services and Applications

Service providers, content providers, and application developers all seek a new way of offering interactive services over cable infrastructure to attract and retain customers and advertisers. CableLabs®, a non-profit research and development consortium, has led the creation of the OpenCable™ Application Platform (OCAP™) specification—a middleware software layer specification that allows service providers to launch exciting digital services and applications on a variety of digital devices.

The U.S. cable industry in late 2007 adopted the term tru2way™ to succeed the terms OpenCable Platform and OCAP as it applies to the marketing and branding of this interactive video platform in retail markets. Since the target audience for this paper is video service providers and interactive application software vendors, the term OCAP will be used throughout the paper to describe this software platform.

One of the main goals of OCAP implementation is to enhance personal/interactive experiences which help retain customers and increase revenue opportunities. The deployment of OCAP allows the developers of interactive television services and applications to design their products so that they will run on any cable television system in North America, independent of set-top or television receiver hardware or operating system software choices. This paper provides an overview of OCAP and discusses Motorola's commitment to delivering end-to end OCAP solutions.

Understanding OCAP

Deploying interactive services on a large scale has typically been fraught with equipment incompatibility. A developer writing applications or services for a particular make of set-top or television could not practically ensure that those applications would run on equipment from other vendors. Writing and deploying applications for multiple platforms is expensive and time-consuming, so a new specification was needed that would standardize the interface to equipment connected to the Hybrid Fiber Coax (HFC) network.

OCAP consists of specifications for middleware and content authoring tools. The middleware creates a level of abstraction while enforcing standard interfaces. Applications—such as a programming guide—run above the middleware, and operating systems function below the middleware. The role of the middleware is to translate the applications so they can draw on hardware and operating system resources.

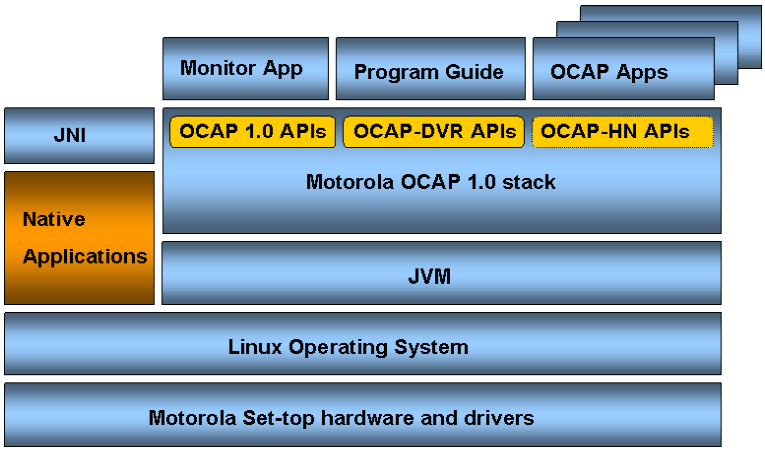

The Motorola OCAP stack runs over Java Virtual Machine and Linux, and includes set-top drivers. It offers flexible APIs for integration with diverse applications.

As a single, open standard, OCAP enables developers of interactive television services and applications to design products that will run on a wide variety of cable television systems in North America, regardless of set-top, television receiver hardware, or operating system software. Adopting the use of OCAP will enable manufacturers and distributors to build and sell to consumers devices such as set-tops, media gateways, and television receivers that will support existing and new offerings delivered by service providers.

The Benefits of OCAP

OCAP provides major benefits to both businesses and consumers. It is designed to establish a common platform for interactive services that can enable service providers to capitalize on new opportunities. The following are just some of the audiences that may benefit from the deployment of OCAP-certified solutions:

Service Providers—The ability to offer interactive programming will attract new subscribers. It will allow service providers to offer compelling value-added services that can increase Average Revenue Per User (ARPU) levels. They will be able to develop and deploy—on a massive scale—innovative programming that reaches subscribers with OCAP-certified devices. OCAP will allow service providers to more effectively compete with satellite providers and telcos by offering interactive services.

OCAP will allow service providers to more effectively compete with satellite providers and telcos by offering interactive services.

Content Providers—OCAP authoring tools will allow content providers to develop flexible programming. They can add interactive elements to their content—such as alternative endings to movies or television shows, or the ability to access sports statistics during an athletic event.

Advertisers—While the Internet has offered flexible interactive advertising opportunities, television has by necessity relied on one-way technology to allow advertisers to promote their products and services. But with OCAP, advertisers can use OCAP tools to develop content that lets viewers easily interact with—and even respond to—commercials.

Application Developers—Porting applications across many devices was never pragmatic or cost effective. The ability to write applications that are portable across all OCAP platforms allows developers to build content, applications, and services targeted to large, distributed audiences. Developers therefore can benefit from economies of scale in creating interactive services.

Device Manufacturers—OCAP can be deployed on diverse devices to enhance the consumer experience with the cable infrastructure. Interactive services can therefore become more prevalent throughout the home, allowing service providers to build lasting bonds with subscribers.

Consumers—Consumers will reap major rewards from OCAP as they benefit from interactive services and rich content. Watching television will be more pleasurable, and consumers will be able to take advantage of interactive services that provide greater participation in the viewing experience.

Interoperability Through OCAP

OCAP is a layer of middleware that exposes application programming interfaces for use. Applications running in the OCAP environment are classified as either bound or unbound. Bound applications are associated with the currently tuned channel, and are terminated when the viewer tunes to another channel. Examples include advertising and the ability to interactively view player statistics during a sport broadcast. Unbound applications are the opposite—they are not bound to a particular channel and are not terminated when a viewer changes the channel. Unbound applications include program guides and the Monitor Application, which manages the lifecyle of other unbound OCAP applications.

Applications can be swiftly developed while ensuring interoperability across multiple hardware platforms. OCAP applications run inside a special piece of software, called a Java® Virtual Machine that handles all of the details of communicating with the underlying hardware. The Java software makes it much faster—and much less expensive—to develop software that runs on multiple devices. Many mobile phones, PDAs, and other electronic devices use Java for this very reason, as do many PC-based World Wide Web applications. The prevalence of Java means there is a large pool of Java developers familiar with writing applications in the Java language. All Java-based technologies are community-governed, making them more open than proprietary options.

Application developers, service providers, and content providers can all develop new applications and services using Java development tools and standards-based application programming interfaces. These applications and services operate independently from the operating system or processor of a given platform, and can be swiftly ported and tested across platforms to ensure interoperability before deployment.

End-to-End OCAP Solutions

From the headend to the home, Motorola is providing a full range of products and the professional services expertise needed to help cable operators successfully implement OCAP solutions.

DIGITAL ACCESS CONTROLLER

The Motorola Digital Addressable Controller (DAC) 6000 system consists of several advanced components that provide the latest in security and control for flexible digital systems. With an easy-to-use, menu-driven system, the Motorola DAC 6000 provides support for a wide variety of addressable control functions. To control these services and functions, the Motorola DAC 6000 is fully compatible with most billing systems through the Digital WireLink Protocol. The DAC 6000 can also be used to generate many types of detailed and summarized reports to facilitate system management. Support for virtual channels in the digital multiplex and control of encryption devices are also a key part of the DAC 6000 functionality.

Cable operators can upgrade their DAC 6000 to version 3.1.1 (or later) software, which supports OCAP and delivery of XAIT (eXtended Application Information Table - used for signaling of unbound applications) and CVT (Code Version Table - used for signaling OCAP middleware download) control messages to set-tops or OCAP Hosts to direct them where to tune for OCAP applications, such as a programming guide. The DAC 6000 also instructs set-tops how to receive a specified bound application that is tied to a channel.

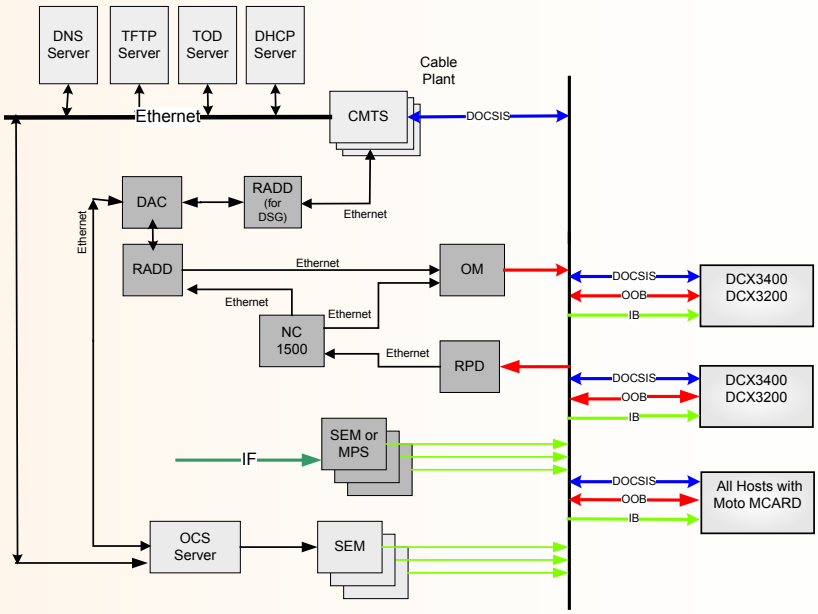

The DAC 6000 supports OCAP and delivers XAIT and CVT control messages to set-tops or OCAP Hosts to tell them where to tune for OCAP applications.

OBJECT CAROUSEL SERVERS

An Object Carousel Server works in conjunction with the DAC 6000 to provide OCAP downloads in-band or through a DOCSIS® channel. Motorola has integrated with leading Object Carousel Server vendors through mutual integration and testing alliances. Motorola has integrated with both Softel's MediaSphere™ iTV and S&T's TSBroadcaster™. Both Object Carousel Servers provide a robust set of features for automatic scheduled encoding and play out of OCAP content. Additionally, the Object Carousel Servers manage creation and definition of transport streams, real time updates to application data, multiple transport stream play out, and bandwidth allocation.

SET-TOPS

Motorola supports OCAP on Motorola Host set-tops with separable security. Host set-tops are not dedicated to a particular encryption system. These set-tops use detachable modules, called CableCARDS, that allow consumers to receive encrypted services for which they pay fees. The Motorola Multi-Stream Cable CableCARD (MCard) is supported on Motorola OCAP-enabled Host set-tops. Motorola OCAP set-tops will also support MCards from other conditional access vendors. Additionally, Motorola MCards will support retail Host devices that may exist on a cable operator's network that uses Motorola MediaCipher® conditional access.

APPLICATION DEVELOPMENT TOOLS

Motorola offers the Motorola DEVPlatform for OCAP™ which enables the development of OCAP applications on the Motorola OCAP platform. It allows Independent Software Vendors (ISVs) to develop and test OCAP applications. The Motorola DEVPlatform for OCAP™ provides an Integrated Development Environment (IDE) based on Eclipse, simulation tools including a WindowsTM PC-based Set-top simulator, and a MPEG Transport Stream (TS) section generator. Using the Motorola DEVPlatform for OCAP developers can write, compile, load, debut and run their xlet OCAP applications on both the simulator and the actual Motorola OCAP set-top without using a headend.

PROFESSIONAL SERVICES

Motorola also offers the expertise to help cable operators rapidly implement OCAP solutions. End-to-end deployment of OCAP requires system integration, field engineering, and project management expertise, and Motorola offers the services and expertise that allow cable operators to successfully implement OCAP solutions.

Motorola: A Leader in OCAP Deployment

Motorola is committed to the OCAP specifications, and is developing an OCAP software stack for its family of advanced Host set-tops.

The Motorola OCAP software stack is designed from the ground up, and is not layered on existing code deployed in current-generation platforms. Because this software code is developed from the ground up—and not retrofit to support OCAP—it provides optimal performance. It simplifies flexibility and provides a small footprint on an OCAP device. The Motorola OCAP software stack incorporates a Linux/Java-based core platform suitable for supporting OCAP on Motorola set-tops.

Motorola is uniquely positioned to deliver OCAP platforms. By leveraging our experience in set-tops, DVRs, and cable infrastructure we can offer a software stack that:

- Meets OCAP certification requirements
- Is highly reliable
- Provides optimized performance

MEDIA MOBILITY

OCAP is an integral part of Motorola's Media Mobility initiative. Imagine a world where you can move your personal or purchased content from one device to another—and then to another; or listen to your music and audio files wherever, whenever, and on whatever device you want. This is Media Mobility. And best of all, it's not just about the technology, (although the technology is cool). Rather, Media Mobility is about the experience and what it can do for the consumer. Motorola is leading the way toward delivering a truly connected Media Mobility experience. To help consumers realize the full potential of Media Mobility, Motorola has a broad portfolio of solutions and services, and OCAP will play a crucial role in Media Mobility implementations.

To help consumers realize the full potential of Media Mobility, Motorola has a broad portfolio of solutions and services, and OCAP will play a crucial role in Media Mobility implementations.

As consumer demand grows for new, broadband connected devices in and around the home, the cable network must evolve to an environment of open standards and interoperability among technologies from multiple vendors. These voice, video, data, and network infrastructure solutions embrace open and emerging standards, such as OCAP, IP, MPEG-4, PacketCable™ Multimedia (PCMM), and DOCSIS®. These standards offer service providers the freedom to pick and choose the components that work best to drive their particular business model, and the confidence to know that each piece will work with the rest.

Media Mobility will enable information, communication or entertainment services on any screen or speaker in the home, and it will allow service providers to offer services to customers who are not at home. For example, imagine the ability to review a program guide from your cell phone when you're out of the house—and then program your DVR from your cell phone to record the shows you'd like to see. OCAP will be a foundation to help support Motorola's Media Mobility initiative. As an open standard, OCAP will enable the set-top as a platform for a wide variety of interactive TV applications, and service providers will be able to deploy applications across a wide variety of retail and leased devices.

FOLLOW ME TV™

Motorola's Follow Me TV™ experience is at the center of Media Mobility, and it will leverage the OCAP specifications to share media throughout the house. Motorola is fully embracing the Open Cable initiatives to support the OCAP Home Networking (HN) specification. Support for this specification enables electronic program guides to offer consumers a consistent DVR experience on multiple TVs throughout the home. Motorola's Follow Me TV technology allows the user to transparently access stored digital entertainment—whether high-definition video on a DVR, music on a computer, or pictures on a digital camera—from any connected device in the home and with mobile devices outside the home. With Motorola's Follow Me TV, consumers can control where, when, and on what devices they become informed, connected, and entertained.

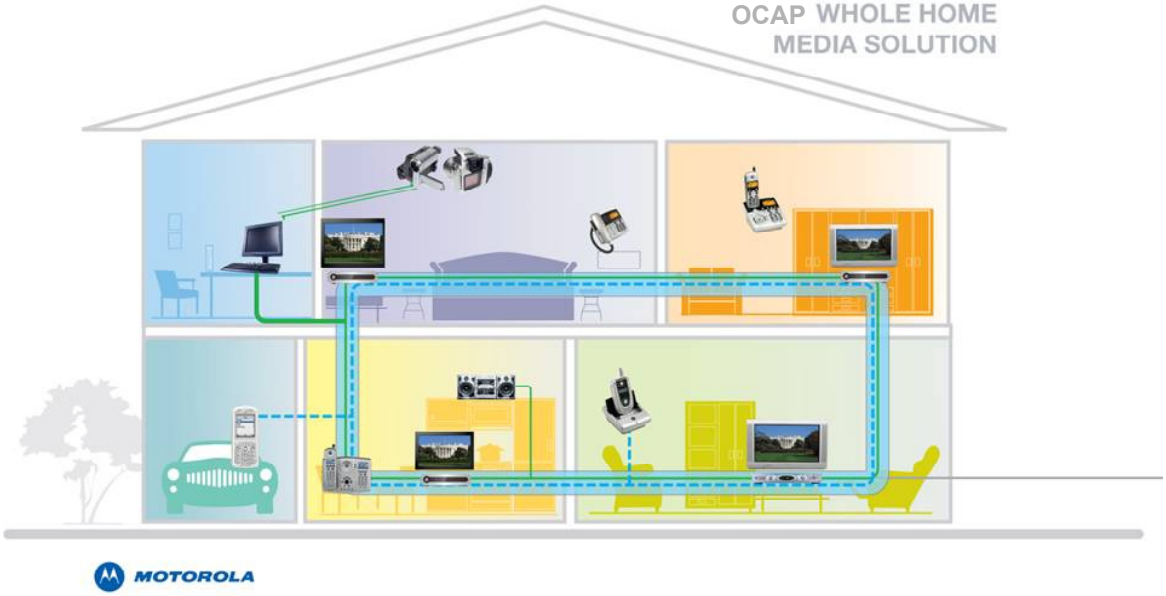

Service providers can deploy OCAP solutions from Motorola that enable the sharing of digital content throughout the home

Consumers will be able to build home networks, and share encrypted digital content between set-tops. TVs throughout the house will be able to access DVR functionality, and DVR expansion will be enabled by pooled tuners and drives. The implementation of the Motorola OCAP stack on set-tops will enable expansion to future applications, such as Caller ID, remote access, and support for portable media devices.

Deploying OCAP Solutions from Motorola

Motorola is committed to OCAP technology and is developing and trialing a middleware software stack designed from the ground up. Service providers can accelerate the delivery of interactive services by selecting OCAP solutions built and tuned for Motorola set-tops. With a goal of making our OCAP enabled set-tops the platform of choice for service providers, Motorola OCAP solutions are designed to deliver the following:

- ***Performance:*** This high performance, standards-based implementation has been designed from the ground up to be a portable and extensible world-class solution.
- ***Portability:*** Service providers can support the OCAP standard across their range of supported set-tops and gain the freedom to select different vendors for set-top applications and hardware.
- ***Faster Service Delivery:*** Motorola set-tops will offer the extensibility needed to quickly support new OCAP capabilities as they emerge. That means faster delivery of new services.
- ***Standards-Based Implementations:*** OCAP middleware will be an integral component of the set-top, and Motorola will enable improved performance to provide a better user experience for new interactive services.
- ***Application Support:*** An optimized stack will minimize memory requirements inside the set-top, which frees up more memory for application support.
- ***Simulation:*** A robust set of development and simulation tools will enable efficient application development.
- ***Broad Implementation:*** Motorola is committed to supporting OCAP across our family of Host set-tops.
- ***Media Mobility:*** The Motorola OCAP stack is architected to support Media Mobility and provide new service opportunities for service providers.
- ***Follow Me TV:*** Motorola's OCAP stack will enable home media sharing and the ability to offer DVR functionality throughout the home.
- ***End-to-End System Integration:*** Motorola provides customers a single source for complete end-to-end system integration of OCAP from the digital headend to the OCAP enabled set-top box.

Motorola is committed to providing an optimized OCAP solution for our advanced set-tops. Motorola will offer media mobility solutions with high-levels of performance, faster time to market, better control over delivery schedules, and enhanced reliability.

The Motorola OCAP platform offers the capability to support new OCAP extensions and delivers the flexibility to enable new applications. For more information about Motorola Home & Networks Mobility solutions and our leading-edge, standards-based products, please visit http://www.motorola.com.

MOTOROLA

Motorola, Inc. www.motorola.com

MOTOROLA and the Stylized M Logo are registered in the US Patent & Trademark Office. All other product or service names are the property of their respective owners.

© Motorola, Inc. 2008. All rights reserved.

532451-001-b 05/08